TCF - CAST COPPER TERMINAL

TCF-25-2

Description

Purpose: Cable to busbar termination for copper cables.

Characteristics: Compression connection. High electrical conductivity and resistance to corrosion. Drilling per NEMA standard.

Application: Power distribution lines.

Material: Copper Alloy.

Finish: No Finishing. Supplied with antioxide compound INTELTROX-Cu.

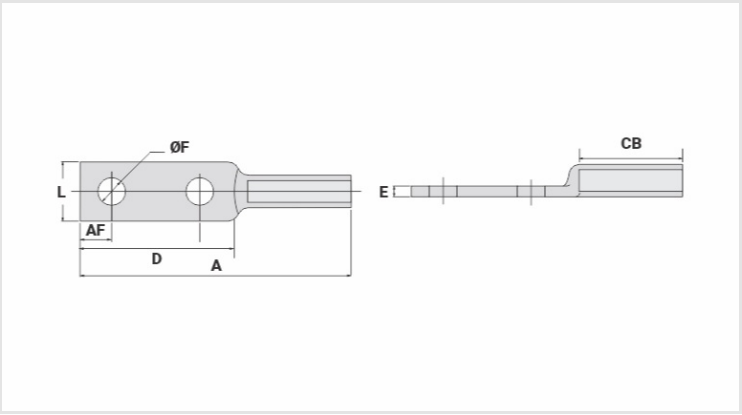

Datasheet

Conductors - Cross Section (mm²)	25
Dimensions	
Diâmetro do Furo (mm)	14,0
Parafuso	
Pol.	1/2
Métrico	M12
L	30,0
A	137,0
CB	52,0
D	78,0
E	5,5
AF	16,0
Application Tool	
Alicate Mecânico (AT-60 4t)	
Matriz	IW-237
Compressões	4
Alicate Hidráulico (AY-96 / CY-96)	
Matriz	IU-237
Compressões	2
Package	
Qtd / Emb	50

Peso Unit. (g)	135,20